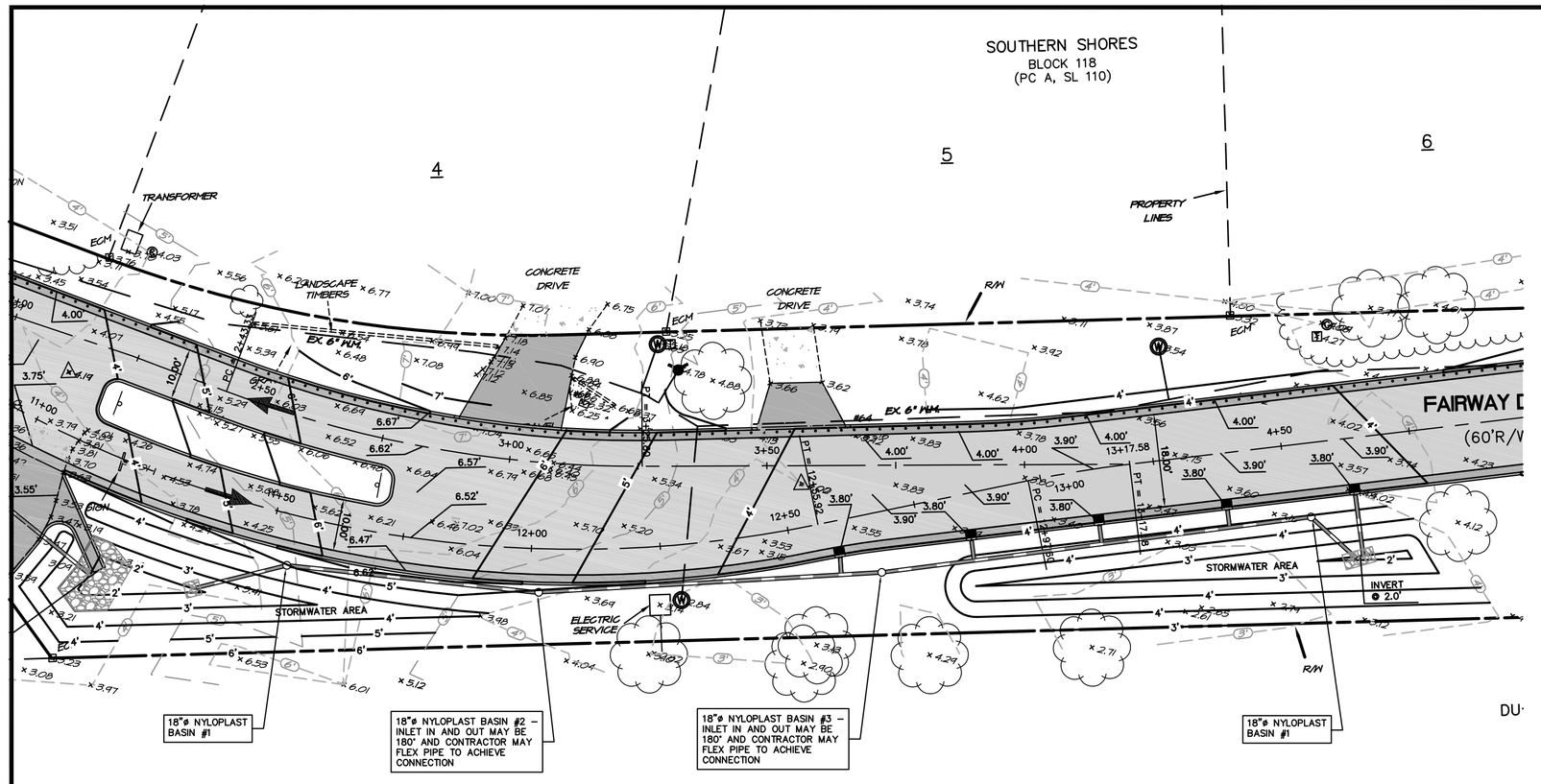

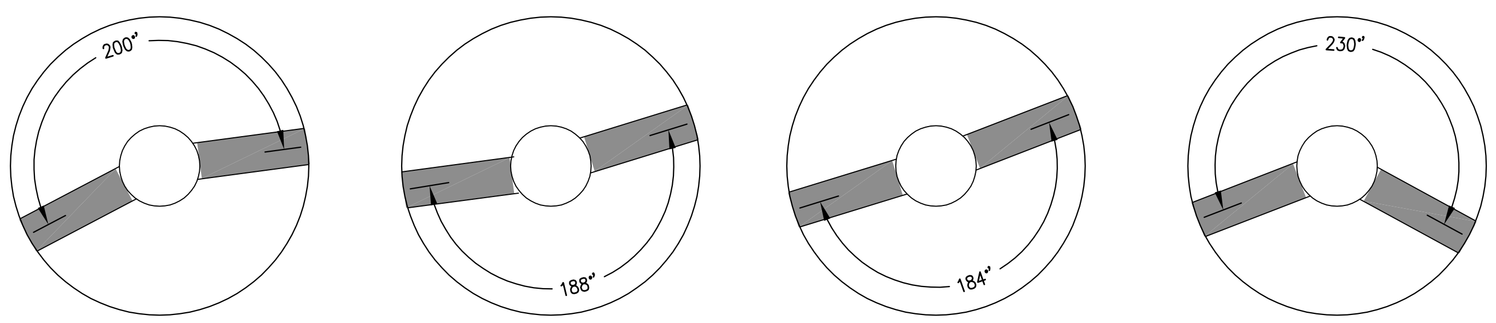

NYLOPLAST BASIN #1 | NYLOPLAST BASIN #2 | NYLOPLAST BASIN #3 | NYLOPLAST BASIN #4

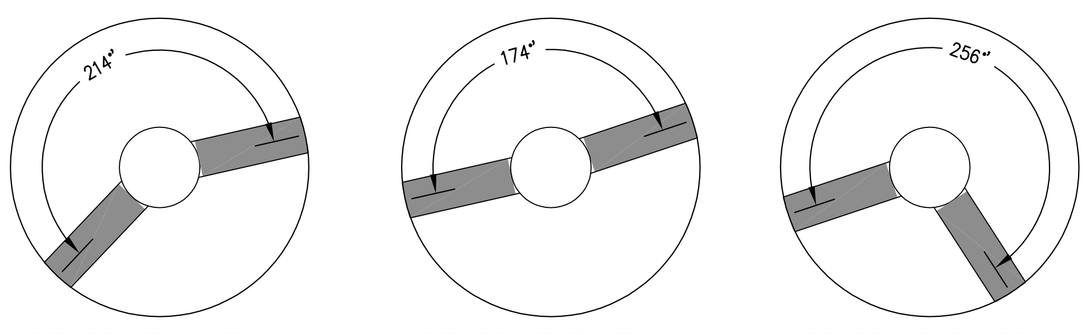

NYLOPLAST BASIN #5 | NYLOPLAST BASIN #6 | NYLOPLAST BASIN #7

GRAPHIC SCALE

0 10 20 40

1 inch = 20 ft.

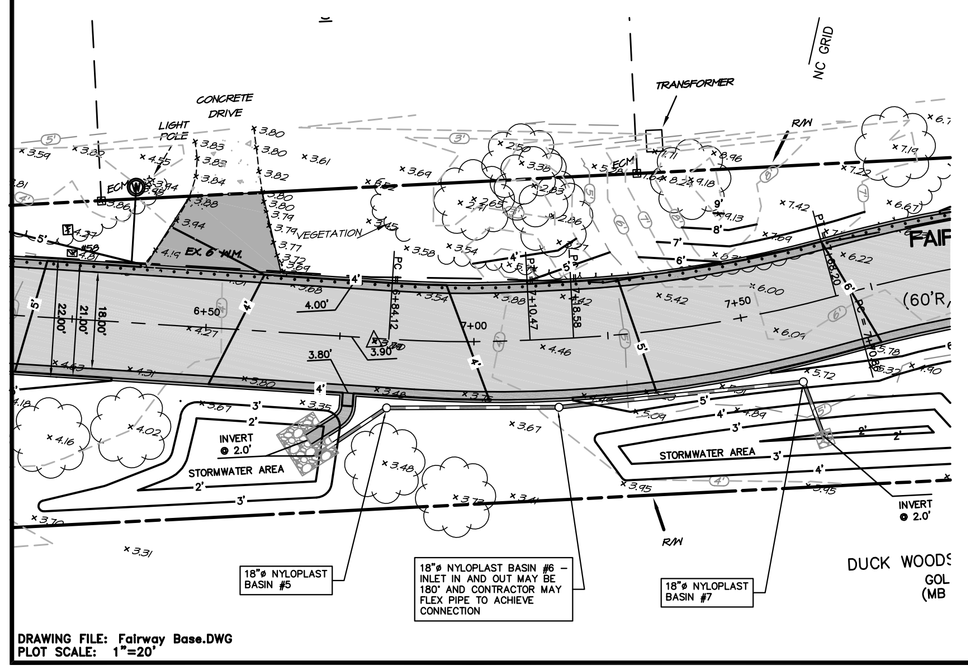

DRAWING FILE: Fairway Base.DWG
PLOT SCALE: 1"=20'

NOTE:
THE DATA GIVEN ON THESE PLANS IS BELIEVED TO BE ACCURATE, BUT THE ACCURACY IS NOT GUARANTEED. THE CONTRACTOR IS RESPONSIBLE FOR VERIFYING ALL LEVELS, LOCATIONS, TYPES, AND DIMENSIONS OF THE EXISTING UTILITIES PRIOR TO CONSTRUCTION. IF A DISCREPANCY IS FOUND, WORK SHALL CEASE AND THE ENGINEER NOTIFIED. WORK MAY CONTINUE UPON ENGINEERS NOTICE TO PROCEED.

BEFORE YOU DIG !
CALL TOLL FREE
1-800-632-4949
NORTH CAROLINA
ONE CALL

LEGEND

- EXISTING ELEVATION(±.03')
- EXISTING ELEVATION(±.05')
- CONCRETE MONUMENT
- IRON ROD/PIPE
- WATER METER
- WATER VALVE
- TELEPHONE PEDESTAL
- EXISTING ASPHALT
- PROPOSED ASPHALT
- PROPOSED CONCRETE
- PROPOSED ABC
- PROPOSED RIPRAP
- PROP. EL. SHOT
- TELEVISION PEDESTAL
- MAIL BOX
- TRAFFIC SIGN
- LIGHT POLE
- R/W
- VEGETATION LIMITS
- TREE
- EXISTING CONTOURS
- APPROX. LOCATION OF POWER UTILITY LINE
- APPROX. LOCATION OF CABLE UTILITY LINE
- APPROX. LOCATION OF PHONE UTILITY LINE
- PROPOSED CONTOURS
- PROPOSED N-12 SOLID WALL PIPE
- PROPOSED CURB BOX
- PROPOSED CURB & GUTTER
- PROPOSED SPILLWAY CURB

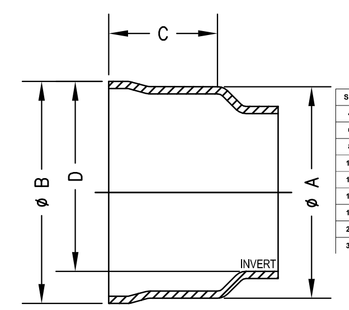

SIZE	DIA MIN	DIA MAX	DB MIN	DB MAX	C MIN	C MAX	D AVG
4"	5.170	5.270	5.546	5.796	3.125	4.510	4.765
6"	7.447	7.517	7.982	8.232	3.313	5.113	6.807
8"	9.670	9.800	10.355	10.605	4.250	6.222	9.013
10"	12.190	12.250	12.850	13.100	5.125	7.026	11.191
12"	15.258	15.469	15.964	16.214	5.500	7.309	13.641
15"	18.230	18.470	18.975	19.225	6.400	9.409	16.542
18"	22.706	22.951	24.304	24.554	7.000	9.787	20.773
24"	29.654	29.916	31.582	31.832	9.125	10.979	27.754
30"	37.274	37.424	39.464	39.714	11.854	13.854	35.168

DIMENSIONS ARE FOR REFERENCE ONLY
ACTUAL DIMENSIONS MAY VARY
DIMENSIONS ARE IN INCHES

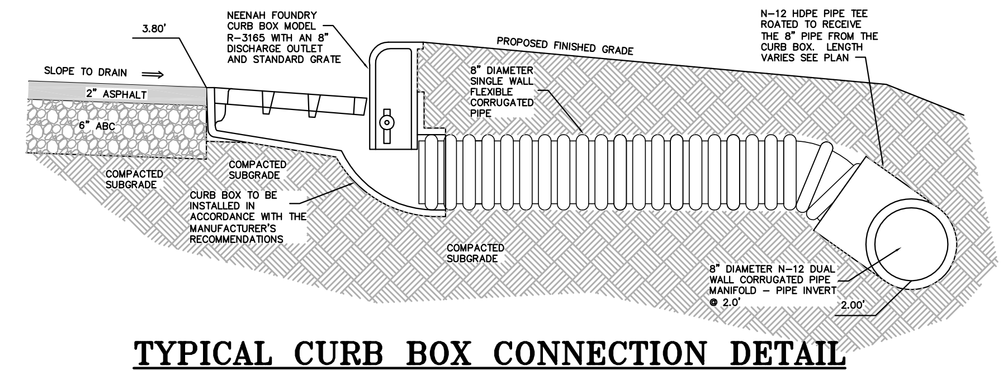

TYPICAL CURB BOX CONNECTION DETAIL

N.T.S.

DIMENSIONS ARE FOR REFERENCE ONLY
ACTUAL DIMENSIONS MAY VARY
DIMENSIONS ARE IN INCHES
*C - SEE DRAWING NO. 7001-110-275 FOR ADS N-12 & HANCOR DUAL WALL BELL INFORMATION & DRAWING NO. 7001-110-364 FOR N-12 HP BELL INFORMATION

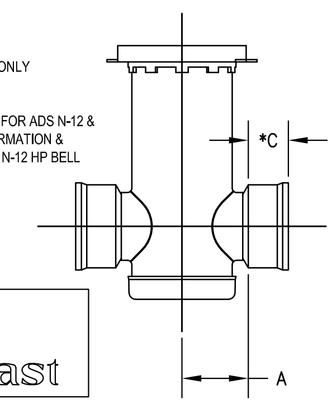

Nyloplast

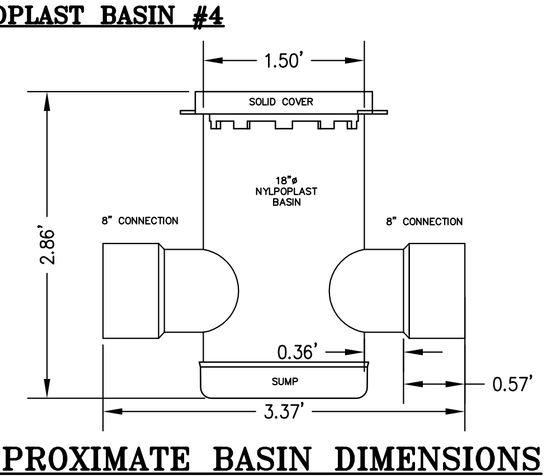

APPROXIMATE BASIN DIMENSIONS

N.T.S. – TO BE CONFIRMED THROUGH THE SHOP DRAWING REVIEW PROCESS

NYLOPLAST DRAIN BASIN WITH SOLID COVER

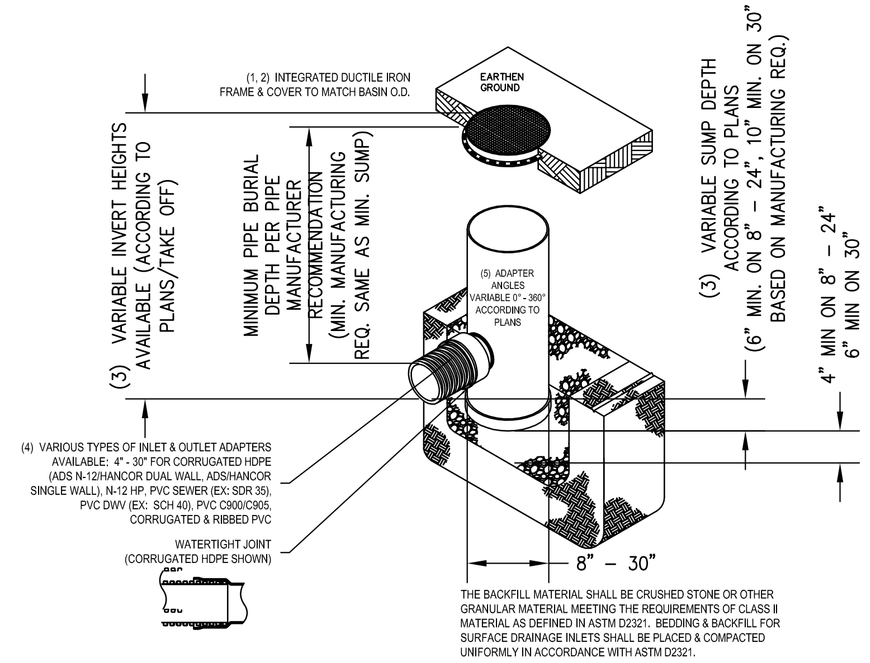

THE BACKFILL MATERIAL SHALL BE CRUSHED STONE OR OTHER GRANULAR MATERIAL MEETING THE REQUIREMENTS OF CLASS II MATERIAL AS DEFINED IN ASTM D2321. BEDDING & BACKFILL FOR SURFACE DRAINAGE INLETS SHALL BE PLACED & COMPACTED UNIFORMLY IN ACCORDANCE WITH ASTM D2321.

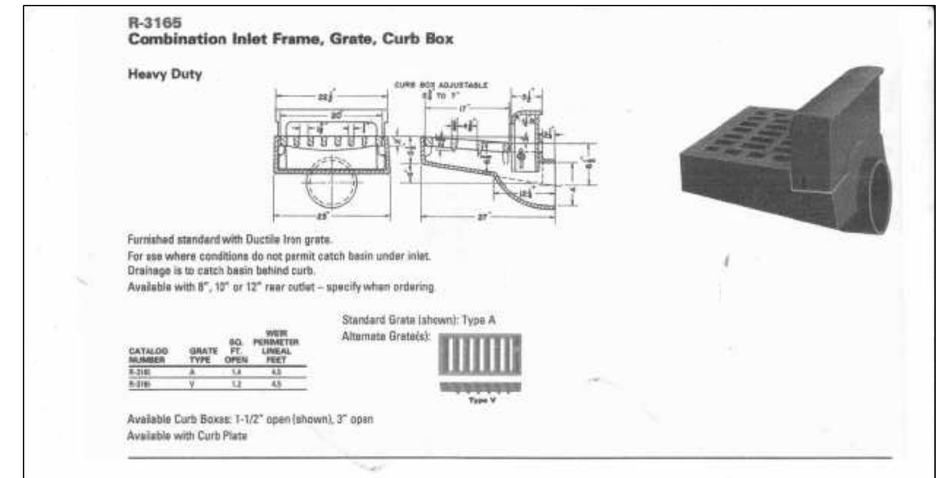

CATALOG NUMBER	GRATE TYPE	SQ. FT. OPEN	WIDE PERIMETER LINEAL FEET
R-3165	A	1.0	4.5
R-3165	V	1.2	4.5

NON TRAFFIC INSTALLATION DRAIN BASIN

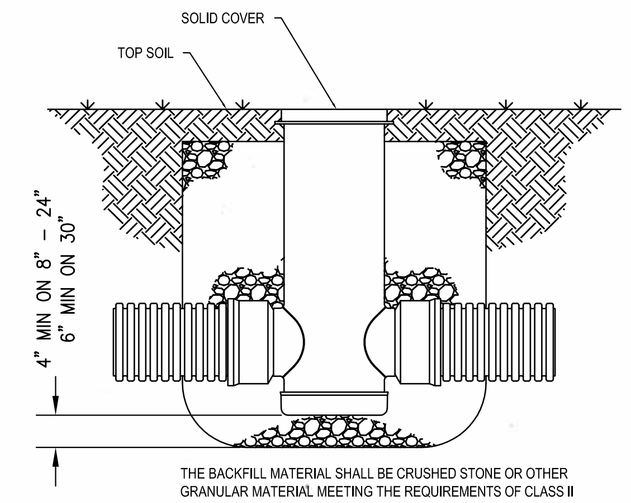

THE BACKFILL MATERIAL SHALL BE CRUSHED STONE OR OTHER GRANULAR MATERIAL MEETING THE REQUIREMENTS OF CLASS II MATERIAL AS DEFINED IN ASTM D2321, OR AS DETERMINED BY LOCAL STANDARDS & SITE ENGINEER. BEDDING & BACKFILL FOR SURFACE DRAINAGE INLETS SHALL BE PLACED & COMPACTED UNIFORMLY IN ACCORDANCE WITH ASTM D2321.

Anlauf Engineering, PLLC
CIVIL ENGINEERING SERVICES
FIRM LICENSE NO. F-0259
JAY A. ANLAUF, P.E. – 4173 WESTERN BLVD., RALEIGH, N.C. – (919) 459-1845

NORTH CAROLINA PROFESSIONAL SEAL 26980 ENGINEER JAY A. ANLAUF
JAY A. ANLAUF, P.E.
CERTIFICATION

COPYRIGHT © 2014, ANLAUF ENGINEERING, PLLC
THIS DOCUMENT IS THE PROPERTY OF ANLAUF ENGINEERING, PLLC. ALL RIGHTS ARE RESERVED. ANY REPRODUCTION OR POSSESSION WITHOUT PRIOR WRITTEN CONSENT OF ANLAUF ENGINEERING, PLLC, WILL BE A VIOLATION OF COPYRIGHT LAW.

NO.	DATE	REVISIONS

DETAILS

FAIRWAY DRIVE
TOWN OF SOUTHERN SHORES
ATLANTIC TOWNSHIP DARE COUNTY NORTH CAROLINA

COMMISSION NO.	P11009.17
DESIGNED BY	JJA
DRAWN BY	JJA
CHECKED BY	JJA
ISSUE DATE	7/31/14

SHEET NO.
D1
OF 7 SHEETS