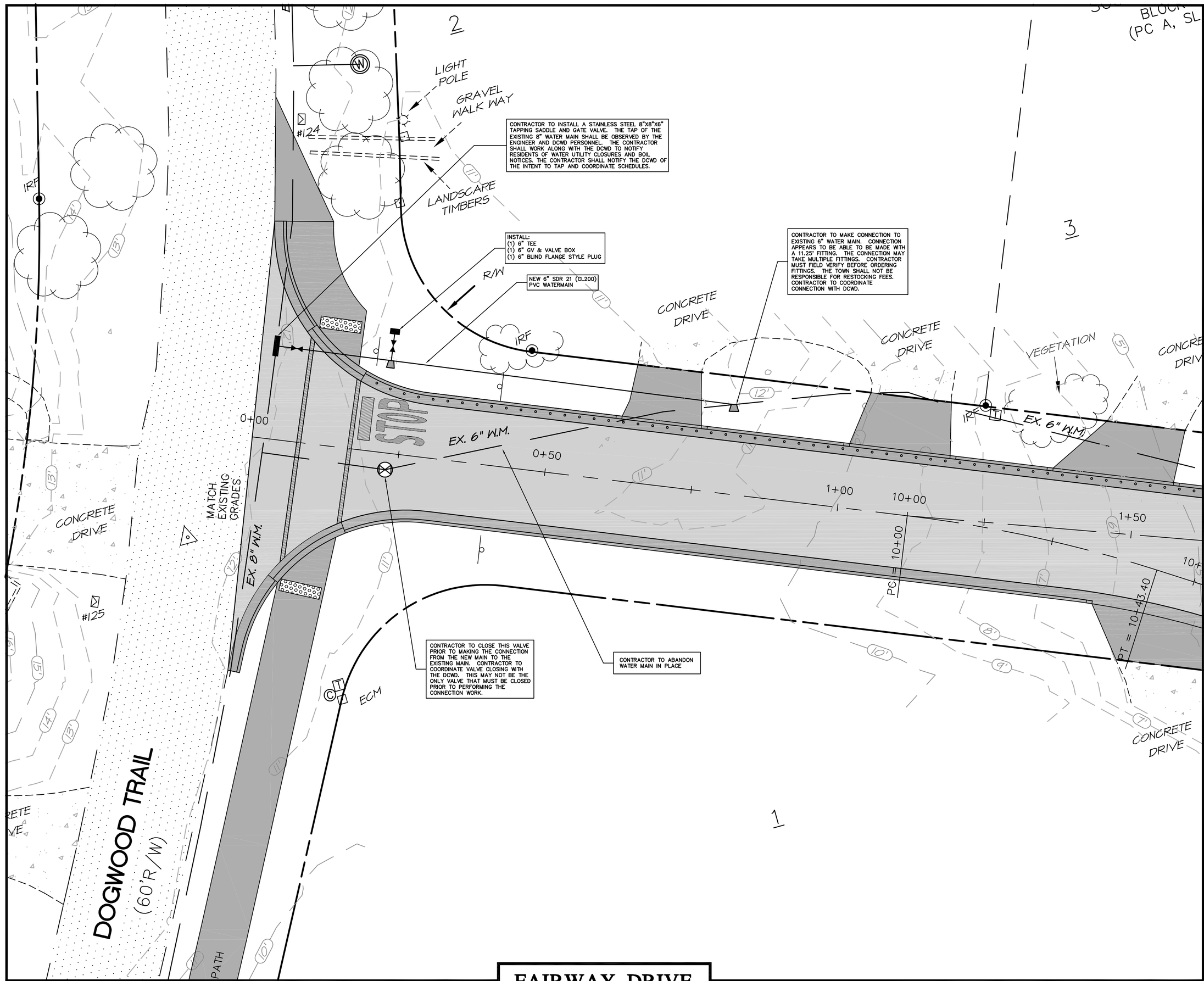

FAIRWAY DRIVE

GRAPHIC SCALE

0 5 10 20

1 inch = 10 ft.

NOTE:
THE DATA GIVEN ON THESE PLANS IS BELIEVED TO BE ACCURATE, BUT THE ACCURACY IS NOT GUARANTEED. THE CONTRACTOR IS RESPONSIBLE FOR VERIFYING ALL LEVELS, LOCATIONS, TYPES, AND DIMENSIONS OF THE EXISTING UTILITIES PRIOR TO CONSTRUCTION. IF A DISCREPANCY IS FOUND, WORK SHALL CEASE AND THE ENGINEER NOTIFIED. WORK MAY CONTINUE UPON ENGINEERS NOTICE TO PROCEED.

BEFORE YOU DIG !
CALL TOLL FREE
1-800-632-4949
NORTH CAROLINA ONE CALL

LEGEND

+ 33.25	EXISTING ELEVATION(±.03')		TELEVISION PEDESTAL
+ 33.0	EXISTING ELEVATION(±.05')		MAIL BOX
	CONCRETE MONUMENT		TRAFFIC SIGN
	IRON ROD/PIPE		LIGHT POLE
	WATER METER		R/W
	WATER VALVE		VEGETATION LIMITS
	TELEPHONE PEDESTAL		TREE
	EXISTING ASPHALT	11' 10'	EXISTING CONTOURS
	PROPOSED ASPHALT		APPROX. LOCATION OF POWER UTILITY LINE
	PROPOSED CONCRETE		APPROX. LOCATION OF CABLE UTILITY LINE
			APPROX. LOCATION OF PHONE UTILITY LINE
	PROPOSED ABC	21	PROPOSED CONTOURS
			PROPOSED N-12 SOLID WALL PIPE
	PROPOSED RIPRAP		PROPOSED CURB BOX
			PROPOSED CURB & GUTTER
4.00'	PROP. EL. SHOT		PROPOSED SPILLWAY CURB

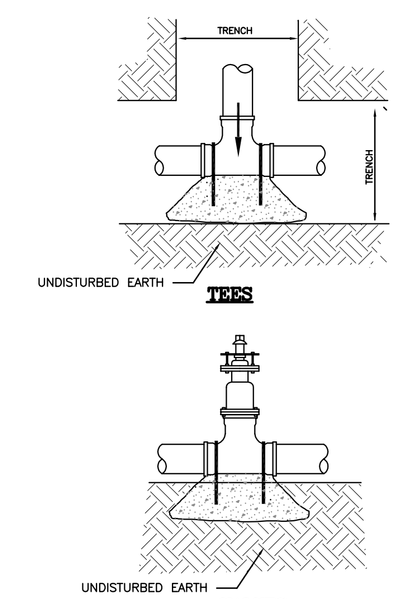

CONCRETE THRUST BLOCK

PIPE SIZE	FITTING	L (FT.)	H (FT.)	T (FT.)
2 – 3 – 4	TEE OR BLOCK	2.0	1.0	1.0
2 – 3 – 4	90	2.0	1.5	1.0
2 – 3 – 4	45	1.5	1.0	1.0
2 – 3 – 4	22 1/2	1.0	1.0	1.0
6	TEE OR BLOCK	2.0	2.0	1.0
6	90	3.0	2.0	1.5
6	45	2.0	1.5	1.0
6	22 1/2	1.5	1.0	1.0
8	TEE OR BLOCK	3.0	2.5	1.5
8	90	4.0	2.5	2.0
8	45	2.5	2.0	1.5
8	22 1/2	2.0	1.5	1.0
12	TEE OR BLOCK	4.0	4.0	2.0
12	90	5.0	4.5	2.5
12	45	4.0	3.0	2.0
12	22 1/2	3.0	2.0	1.5

NOTE:
THIS TABLE BASED ON WATER PRESSURE 150 PSI
SOIL BRG. 1500 #/SQ. FT. TO 2000 #/SQ. FT.

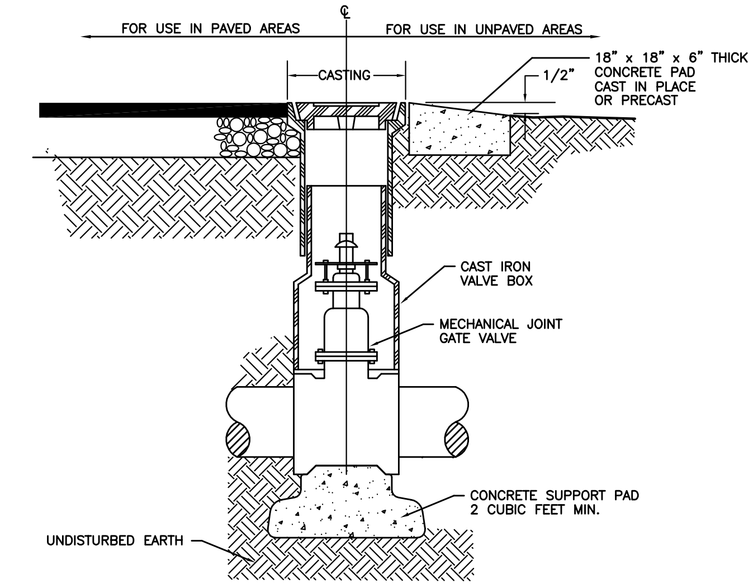

GATE VALVE ASSEMBLY

N.T.S.

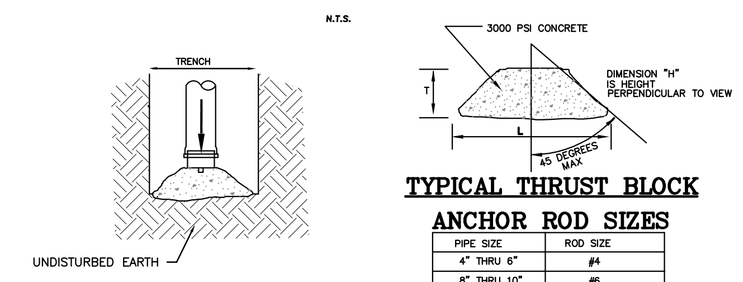

TYPICAL THRUST BLOCK ANCHOR ROD SIZES

PIPE SIZE	ROD SIZE
4" THRU 6"	#4
8" THRU 10"	#6
12" THRU 18"	#8

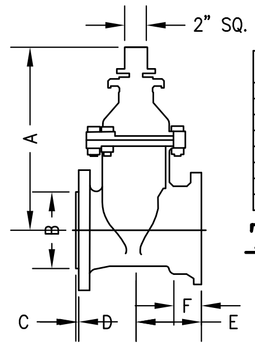

DIMENSION	VALVE SIZE				
	4"	6"	8"	10"	12"
A	13-3/8	16-3/4	20-3/16	24-1/8	27-1/2
B +.000/-.031	4.984	6.984	8.984	10.984	12.984
C ±.016	.188	.250	.250	.250	.250
D (FLANGED END)	4-1/2	5-1/4	5-3/4	6-1/2	7
E (MJ END)	5-5/8	6	6-7/8	7-3/8	8-5/16
F	2-1/2	2-1/2	2-1/2	2-1/2	2-1/2
NO. OF TURNS TO OPEN	13	19	26	32	38
MAX. CUTTER DIAMETER	3-3/4	5-3/4	7-3/4	9-3/4	11-3/4

TYPICAL TAPPING VALVE DETAIL

AMERICAN FLOW CONTROL SERIES 2500 RESILIENT WEDGE VALVE

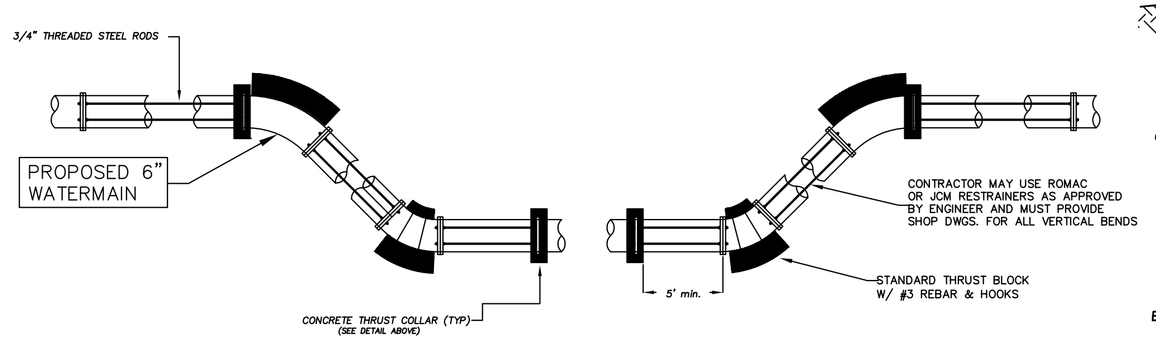

GENERAL NOTES

1. ONCE INSTALLED AND TIGHT, THE STEEL RODS AND BOLTS SHALL BE COATED WITH 2 COATS OF BITUMINOUS BASE PAINT.
2. CONCRETE SHALL NOT CONTACT BOLTS OR ENDS OF MECHANICAL JOINT BENDS.
3. PROVIDE SHOP DRAWINGS FOR ALL VERTICAL BENDS

STANDARD VERTICAL OR HORIZONTAL BEND

N.T.S.

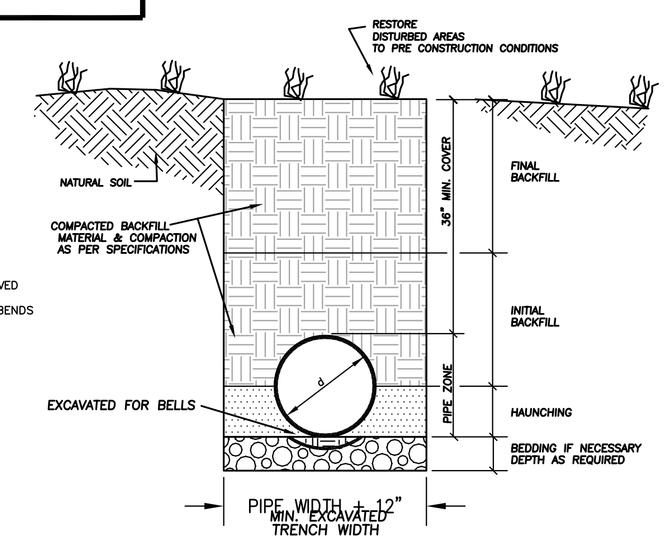

TRENCH SECTION

N.T.S.

NOMINAL PIPE SIZE	SLEEVE O.D. RANGE (INCHES)	CATALOG NUMBER			APPROX. WEIGHT (LBS.)
		SLEEVE NUMBER	BY	BRANCH SIZE	
4"	4.40 – 4.60 4.70 – 4.90 5.10 – 5.30	SST – 4.60 SST – 4.90 SST – 5.30	X	3" FLG. 4" FLG.	28# 30#
6"	6.60 – 7.00 6.90 – 7.30 7.10 – 7.50	SST – 7.00 SST – 7.30 SST – 7.50	X	3" FLG. 4" FLG. 6" FLG.	36# 38# 45#
8"	7.90 – 8.30 8.40 – 8.80 8.54 – 9.45 9.20 – 9.60 9.90 – 10.30	SST – 8.30 SST – 8.80 SST – 9.45 SST – 9.60 SST – 10.30	X	3" FLG. 4" FLG. 6" FLG. 8" FLG.	42# 44# 48# 66#
10"	10.73 – 11.13 11.08 – 11.45 11.79 – 12.19	SST – 11.13 SST – 11.45 SST – 12.19	X	3" FLG. 4" FLG. 6" FLG. 8" FLG. 10" FLG.	45# 48# 55# 70# 80#
12"	12.75 x 12 12.45 – 12.85 12.90 – 13.30 13.40 – 13.80 13.48 – 13.90 13.98 – 14.38	SST – 12.85 SST – 13.30 SST – 13.56 SST – 13.80 SST – 13.90 SST – 14.38	X	3" FLG. 4" FLG. 6" FLG. 8" FLG. 10" FLG. 12" FLG.	50# 52# 61# 81# 84# 143#
14"	15.20 – 15.60 15.80 – 16.20 16.38 – 16.78	SST – 15.60 SST – 16.20 SST – 16.78	X	3" FLG. 4" FLG. 6" FLG. 8" FLG. 10" FLG. 12" FLG.	62# 64# 74# 81# 95# 154#
16"	17.15 – 17.55 17.40 – 17.80 17.55 – 17.95 17.85 – 18.25 18.58 – 18.98 19.30 – 19.70	SST – 17.55 SST – 17.80 SST – 17.95 SST – 18.25 SST – 18.98 SST – 19.70	X	3" FLG. 4" FLG. 6" FLG. 8" FLG. 10" FLG. 12" FLG.	78# 80# 83# 105# 115# 172#
18"	19.80 – 20.20 20.20 – 20.60 21.00 – 21.40	SST – 20.20 SST – 20.60 SST – 21.40	X	3" FLG. 4" FLG. 6" FLG. 8" FLG. 10" FLG. 12" FLG.	92# 94# 110# 119# 139# 191#
20"	21.40 – 21.80 21.90 – 22.30 22.30 – 22.70	SST – 21.80 SST – 22.30 SST – 22.70	X	3" FLG. 4" FLG. 6" FLG. 8" FLG. 10" FLG. 12" FLG.	81# 84# 89# 99# 120# 205#
24"	23.30 – 23.70 23.80 – 24.20 25.60 – 26.00 26.10 – 26.50	SST – 23.70 SST – 24.20 SST – 26.00 SST – 26.50	X	3" FLG. 4" FLG. 6" FLG. 8" FLG. 10" FLG. 12" FLG.	85# 87# 90# 100# 145# 230#

TYPICAL TAPPING SLEEVE DETAIL

ROMAC INDUSTRIES, INC. "SST" STAINLESS STEEL TAPPING SLEEVE

DRAWING FILE: Fairway Base.DWG
PLOT SCALE: 1"=20'

Anlauf Engineering, PLLC
CIVIL ENGINEERING SERVICES
FIRM LICENSE NO. P-0259
JAY A. ANLAUF, P.E. - 4120 WEST CORPORATE DRIVE, N.C. - (252) 489-1845

NORTH CAROLINA PROFESSIONAL SEAL 26980 ENGINEER JOSEPH JAY ANLAUF
CERTIFICATION

COPYRIGHT © 2014, ANLAUF ENGINEERING, PLLC
THIS DOCUMENT IS THE PROPERTY OF ANLAUF ENGINEERING, PLLC. ALL RIGHTS ARE RESERVED. ANY REPRODUCTION OR POSSESSION WITHOUT PRIOR WRITTEN CONSENT OF ANLAUF ENGINEERING, PLLC. SHALL BE A VIOLATION OF COPYRIGHT LAW.

NO.	DATE	REVISIONS

UTILITY PLAN

FAIRWAY DRIVE

TOWN OF SOUTHERN SHORES
DARE COUNTY
ATLANTIC TOWNSHIP
NORTH CAROLINA

COMMISSION NO.	P11009.17
DESIGNED BY	JJA
DRAWN BY	JJA
CHECKED BY	JJA
ISSUE DATE	7/31/14

SHEET NO.
U1
OF 7 SHEETS