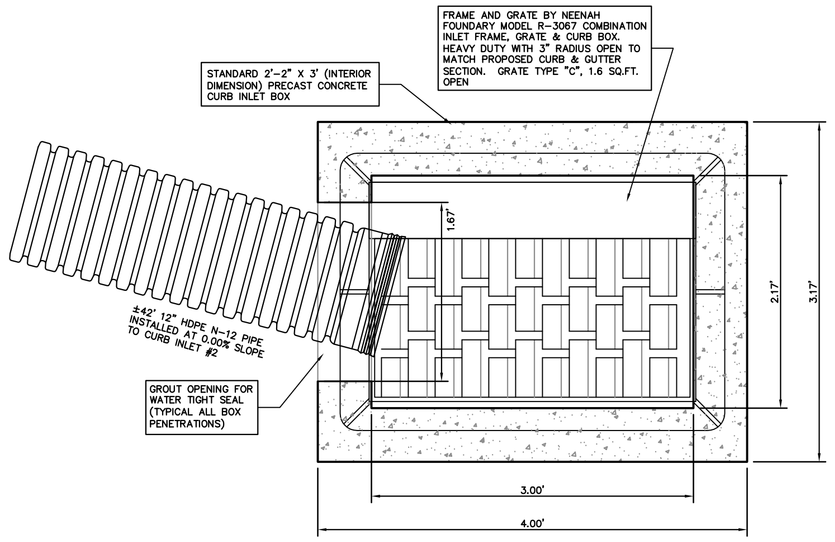

PLAN VIEW – CURB INLET #1

N.T.S.

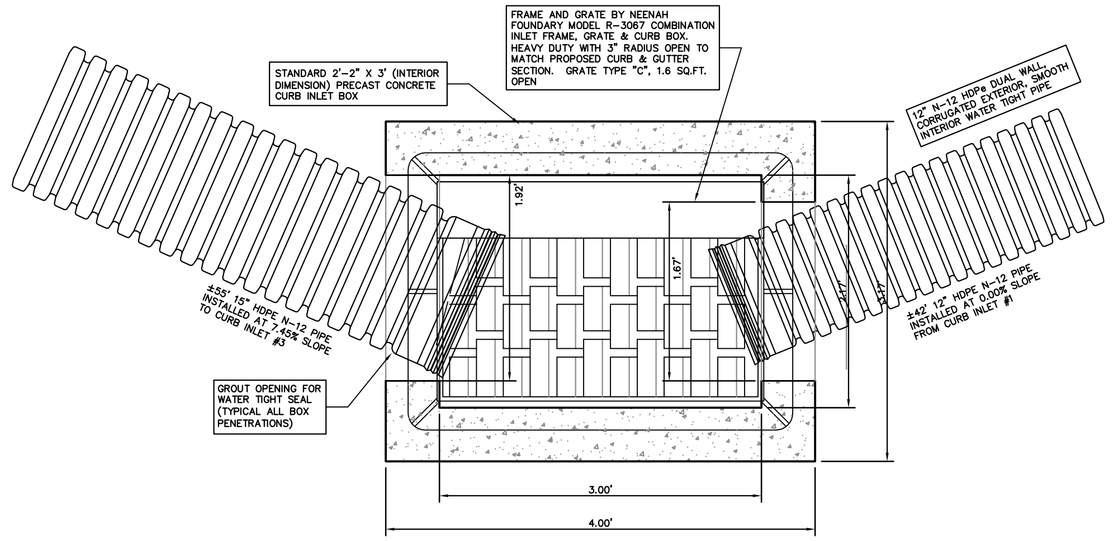

PLAN VIEW – CURB INLET #2

N.T.S.

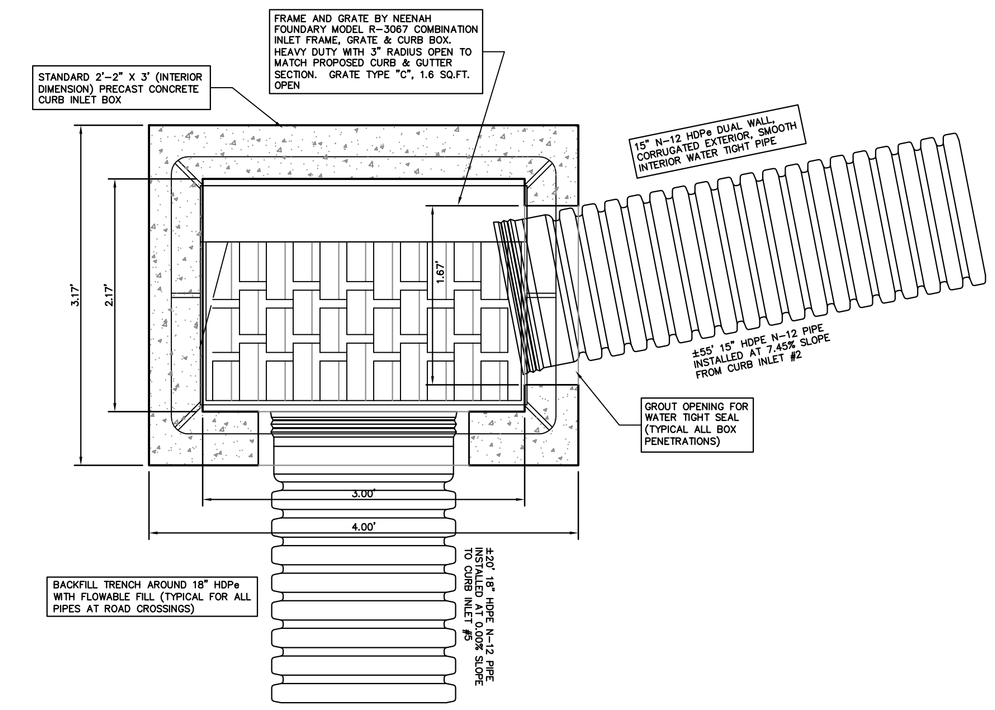

PLAN VIEW – CURB INLET #3

N.T.S.

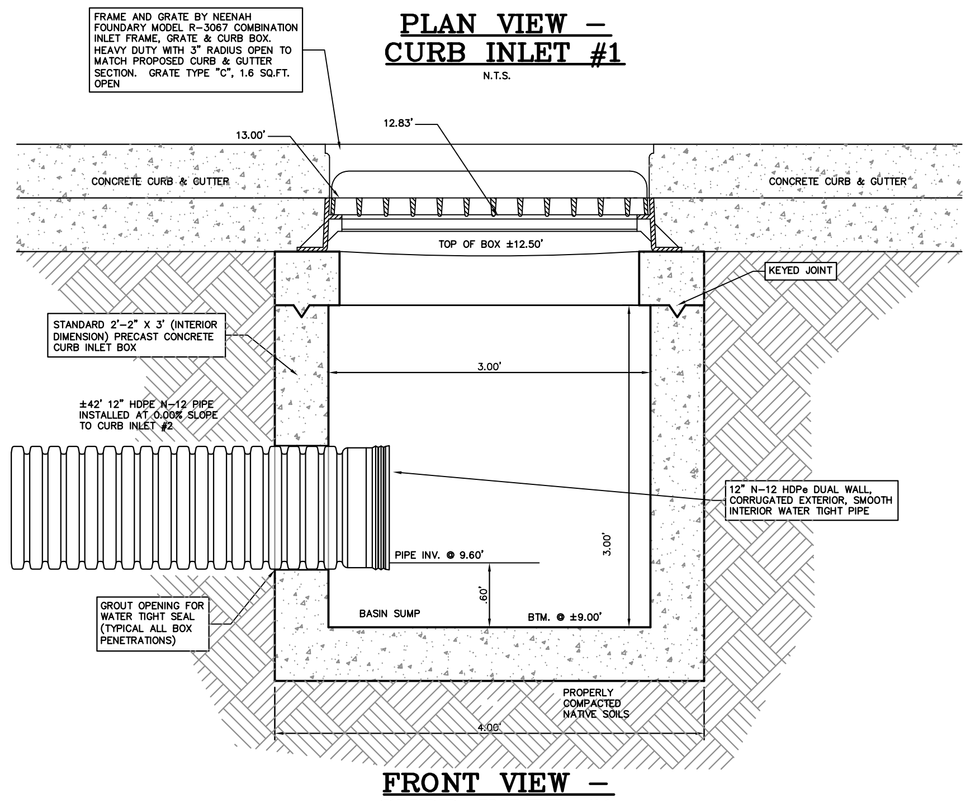

FRONT VIEW – CURB INLET #1

N.T.S.

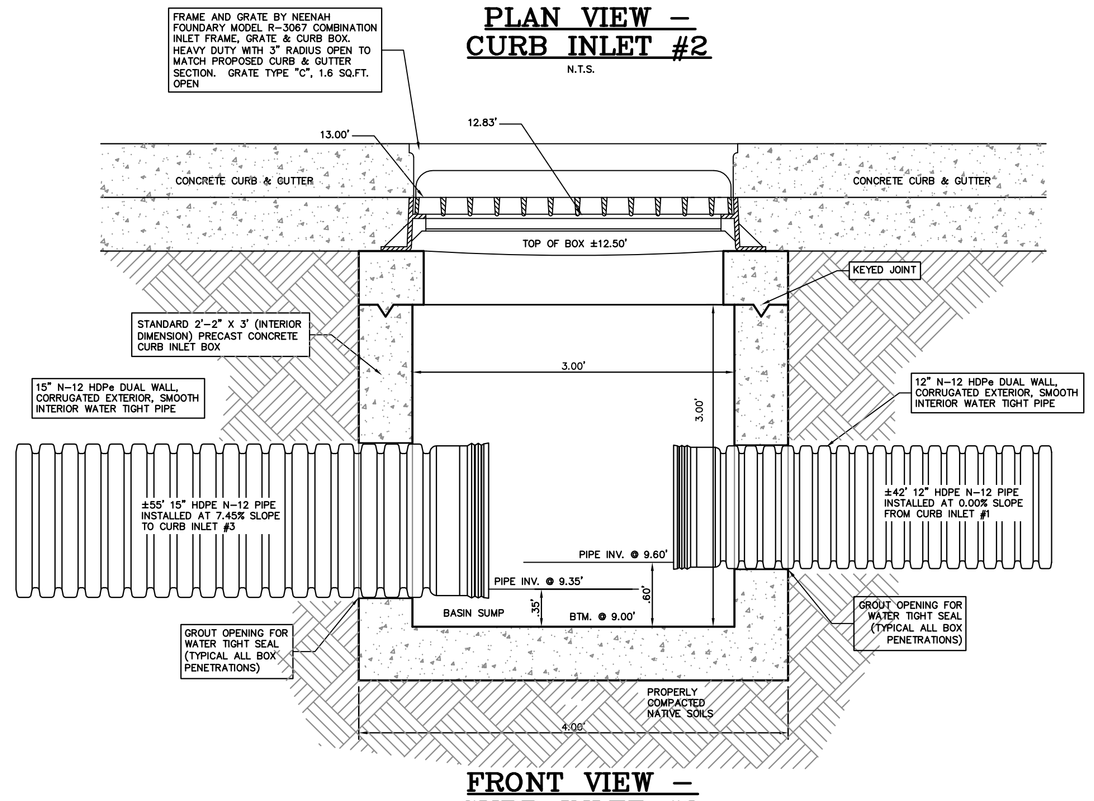

FRONT VIEW – CURB INLET #2

N.T.S.

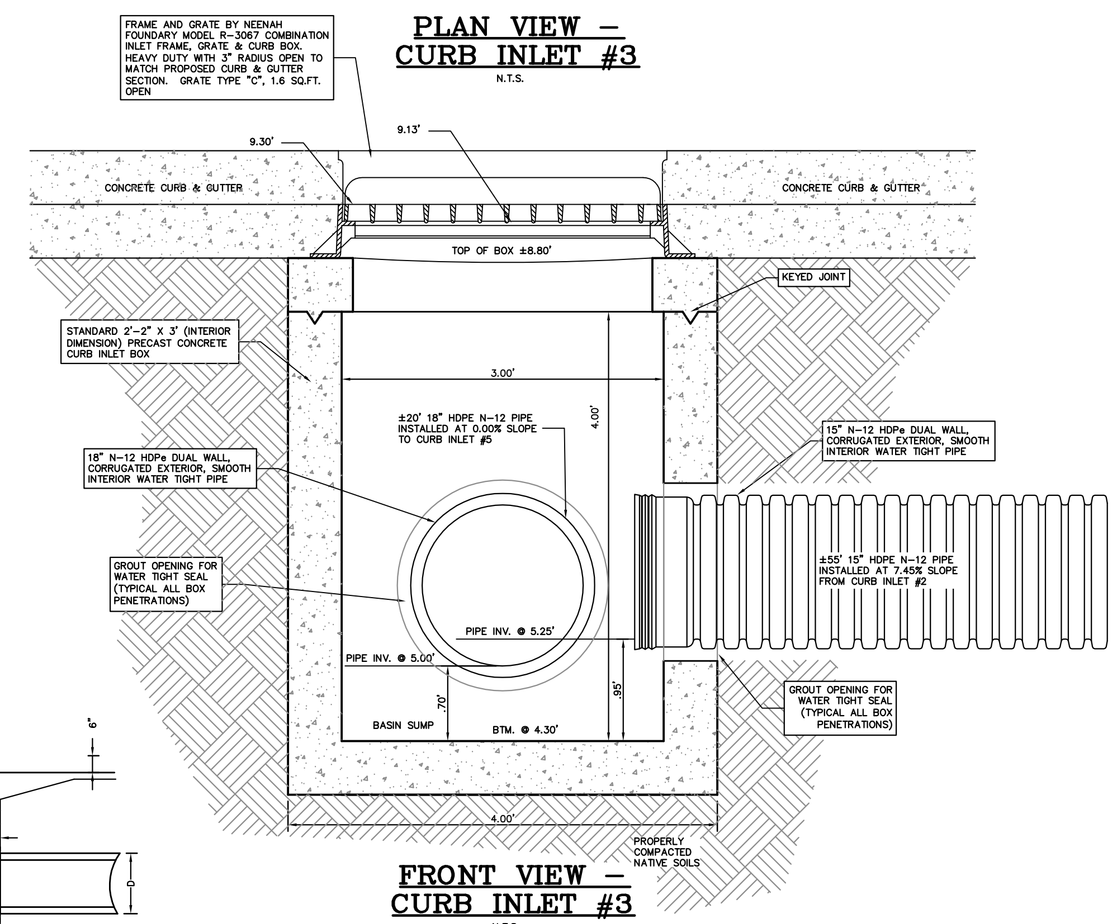

FRONT VIEW – CURB INLET #3

N.T.S.

BACKFILL TRENCH AROUND 18" HDPe WITH FLOWABLE FILL (TYPICAL FOR ALL PIPES AT ROAD CROSSINGS)

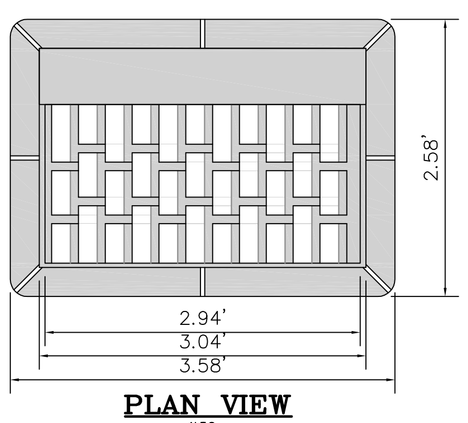

PLAN VIEW

N.T.S.

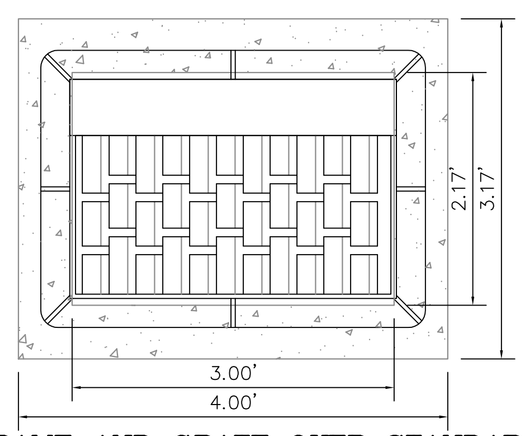

FRAME AND GRATE OVER STANDARD 2'-2" X 3' PRECAST CONCRETE BOX

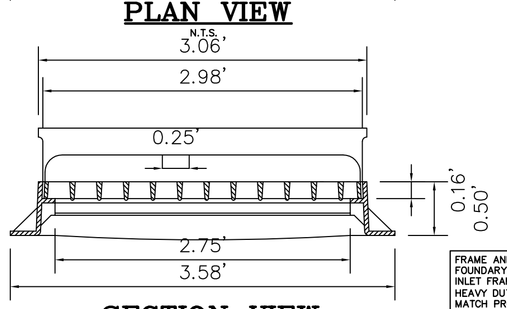

SECTION VIEW

N.T.S.

FRAME AND GRATE BY NEENAH FOUNDARY MODEL R-3067 COMBINATION INLET FRAME, GRATE & CURB BOX. HEAVY DUTY WITH 3" RADIUS OPEN TO MATCH PROPOSED CURB & GUTTER SECTION. GRATE TYPE "C", 1.6 SQ.FT. OPEN

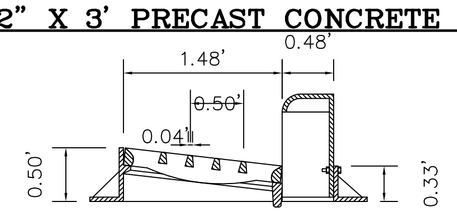

END SECTION

N.T.S.

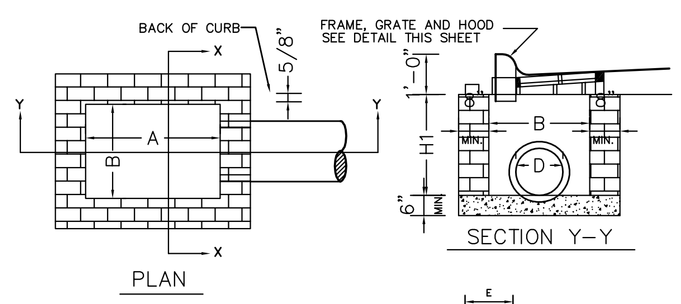

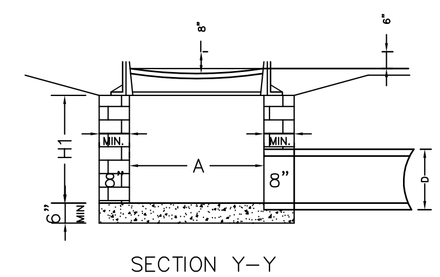

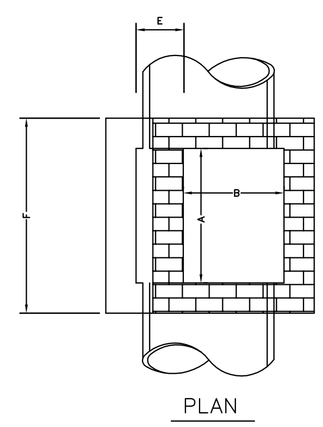

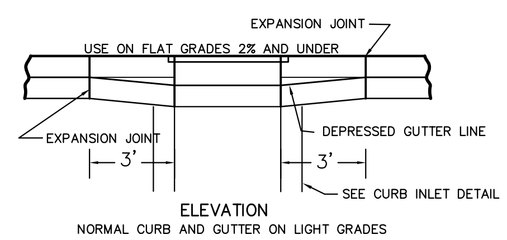

MINIMUM DIMENSIONS AND QUANTITIES FOR BRICK CATCH BASIN					
DIMENSIONS OF BOX AND PIPE					
PIPE	SPAN	WIDTH	WIDTH	SPAN	HEIGHT
D	A	B	C	G	MIN H1
12"	3'-0"	2'-2"			2'-3"
15"	3'-0"	2'-2"			2'-6"
18"	3'-0"	2'-2"			2'-10"
24"	3'-0"	2'-2"			3'-2"

BRICK CATCH BASIN

REF. NCDOT STD. 840.01

N.T.S.

NOTE:
THE DATA GIVEN ON THESE PLANS IS BELIEVED TO BE ACCURATE, BUT THE ACCURACY IS NOT GUARANTEED. THE CONTRACTOR IS RESPONSIBLE FOR VERIFYING ALL LEVELS, LOCATIONS, TYPES, AND DIMENSIONS OF THE EXISTING UTILITIES PRIOR TO CONSTRUCTION. IF A DISCREPANCY IS FOUND, WORK SHALL CEASE AND THE ENGINEER NOTIFIED. WORK MAY CONTINUE UPON ENGINEERS NOTICE TO PROCEED.

BEFORE YOU DIG !
CALL TOLL FREE
1-800-632-4949
NORTH CAROLINA ONE CALL

DRAWING FILE: NSE Dogwood Intersection.DWG
PLOT SCALE: 1"=20'

Anlauf Engineering, PLLC
CIVIL ENGINEERING SERVICES
FIRM LICENSE NO. P-0929
JAY A. ANLAUF, P.E. – 4173 WESTCHESTER DRIVE – KITTY HAWK, NC – (252) 480-1845

NORTH CAROLINA PROFESSIONAL SEAL 26980 ENGINEER JOSEPH A. ANLAUF
Joseph A. Anlauf, P.E.
CERTIFICATION

COPYRIGHT © 2014, ANLAUF ENGINEERING, PLLC
THIS DOCUMENT IS THE PROPERTY OF ANLAUF ENGINEERING, PLLC. ALL RIGHTS ARE RESERVED. ANY REPRODUCTION, USE OR POSSESSION WITHOUT PRIOR WRITTEN CONSENT OF ANLAUF ENGINEERING, PLLC, WILL BE A VIOLATION OF COPYRIGHT LAW.

NO.	DATE	REVISIONS

DETAIL SHEET

NORTH, SOUTH & EAST DOGWOOD TRAIL INTERSECTION
TOWN OF SOUTHERN SHORES

ATLANTIC TOWNSHIP — DARE COUNTY — NORTH CAROLINA

COMMISSION NO.	P11009.21
DESIGNED BY	JJA
DRAWN BY	JJA
CHECKED BY	JJA
ISSUE DATE	7/24/14

SHEET NO. D1 OF 7 SHEETS