FOXGRAPE LANE

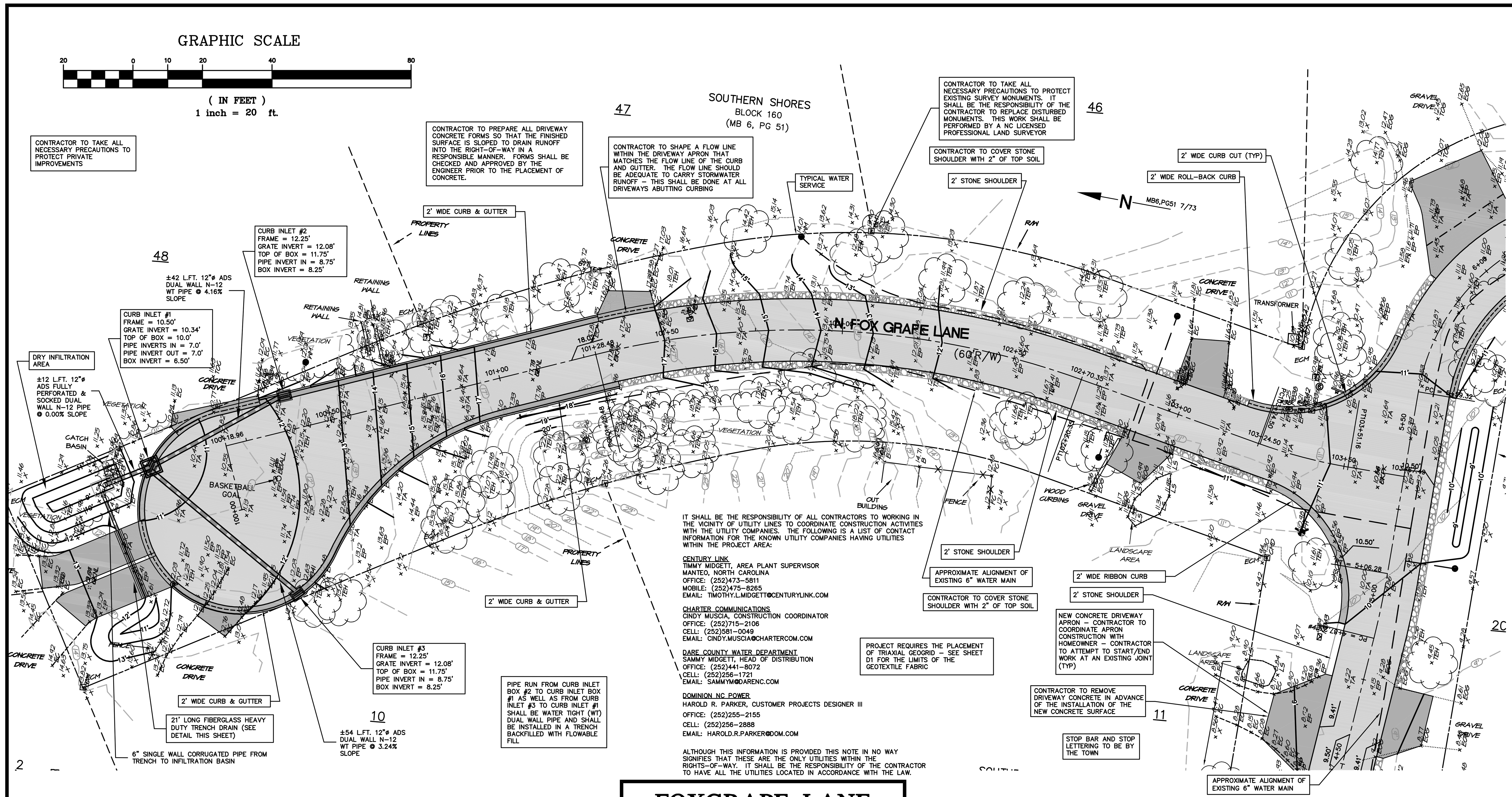

SURVEY DATA PROVIDED BY BARNETTE INTEGRATED LAND DEVELOPMENT ON PLAT ENTITLED "TOPOGRAPHIC BASE MAP FOR: THE TOWN OF SOUTHERN SHORES, STREET IMPROVEMENTS, FOX GRAPE LANE" AND DATED 4/1/15.

EXISTING WATERLINE INFORMATION BASED ON A COMBINATION OF ABOVE GROUND SURVEY DATA AND DIGITIZED LINEWORK AS SHOWN ON GIS PLAT ENTITLED " DARE COUNTY WATER SYSTEM, FOX GRAPE LANE – DARE COUNTY WATER – GIS – TIM BUTCH" AND DATED MARCH 9, 2015. SIZE, TYPE, AND LOCATION IS APPROXIMATE AND SHOULD BE FIELD VERIFIED BY THE CONTRACTOR

GRAPHIC SCALE

0 10 20 40

(IN FEET)
1 inch = 20 ft.

PROFILE OF NORTH FOX GRAPE LANE
SCALE: 1"= 20'
VERTICAL SCALE: 1"= 4'
VERTICAL SCALE IS EXAGGERATED 5 TIMES

BEFORE YOU DIG !
CALL TOLL FREE
1-800-632-4949
NORTH CAROLINA ONE CALL

WORK ZONE TRAFFIC CONTROL SHALL BE PROVIDED IN ACCORDANCE WITH NCDOT WORK ZONE TRAFFIC CONTROL STANDARD DRAWINGS 1101.01-1180.01

CONTRACTOR TO TEMPORARILY RELOCATE ALL MAILBOXES THAT ARE IN CONFLICT WITH THE WORK. THE CONTRACTOR SHALL TAKE ALL NECESSARY MEASURES TO ENSURE THAT MAIL CAN BE DELIVERED DURING THE DURATION OF THE PROJECT.

CONTRACTOR TO MAINTAIN ALL STREET SIGNS DURING THE DURATION OF THE PROJECT.

WORK ZONE TRAFFIC CONTROL SHALL BE PROVIDED IN ACCORDANCE WITH NCDOT WORK ZONE TRAFFIC CONTROL STANDARD DRAWINGS 1101.01-1180.01

CONTRACTOR TO TAKE ALL NECESSARY PRECAUTIONS TO PROTECT EXISTING DRIVEWAY SURFACES (TYPICAL) CONTRACTOR TO PROVIDE ACCESS TO DRIVEWAYS AND PROPERTIES AT ALL TIMES DURING THE DURATION OF THE PROJECT (TYPICAL)

CONCRETE DRIVEWAYS: CONTRACTOR SHALL INSTALL NEW CONCRETE DRIVEWAY APRON TO MATCH THE TYPE, COLOR AND STYLE OF THE EXISTING CONCRETE DRIVEWAY (TYPICAL ALL DRIVEWAYS)

CONTRACTOR TO RELOCATE SIGNS AS NEEDED TO MAKE WAY FOR THE NEW ROAD.

SEED ALL DISTURBED AREAS IN ACCORDANCE WITH THE GENERAL SEEDING SPECIFICATIONS

CONTRACTOR TO TAKE ALL NECESSARY PRECAUTIONS TO PROTECT EXISTING UTLITIES

THE ILLUSTRATION OF THE APPROXIMATE LOCATIONS OF THE EXISTING UTILITY LINES ARE IN ACCORDANCE TO FIELD MARKINGS PLACED IN THE RIGHT-OF-WAY BY ULOCO UNDER MARKING TICKET NUMBERS C152171925, C152171945 & C152171970. THE MARKINGS CONTAINED ON THE PLAN ARE SHOW FOR ILLUSTRATIVE PURPOSES ONLY. THE REPRESENTATIONS OF THE BURIED UTLITIES SHALL IN NO WAY BE CONSIDERED COMPLETE OR RELEASE THE CONTRACTOR FROM LOCATION RESPONSIBILITIES.

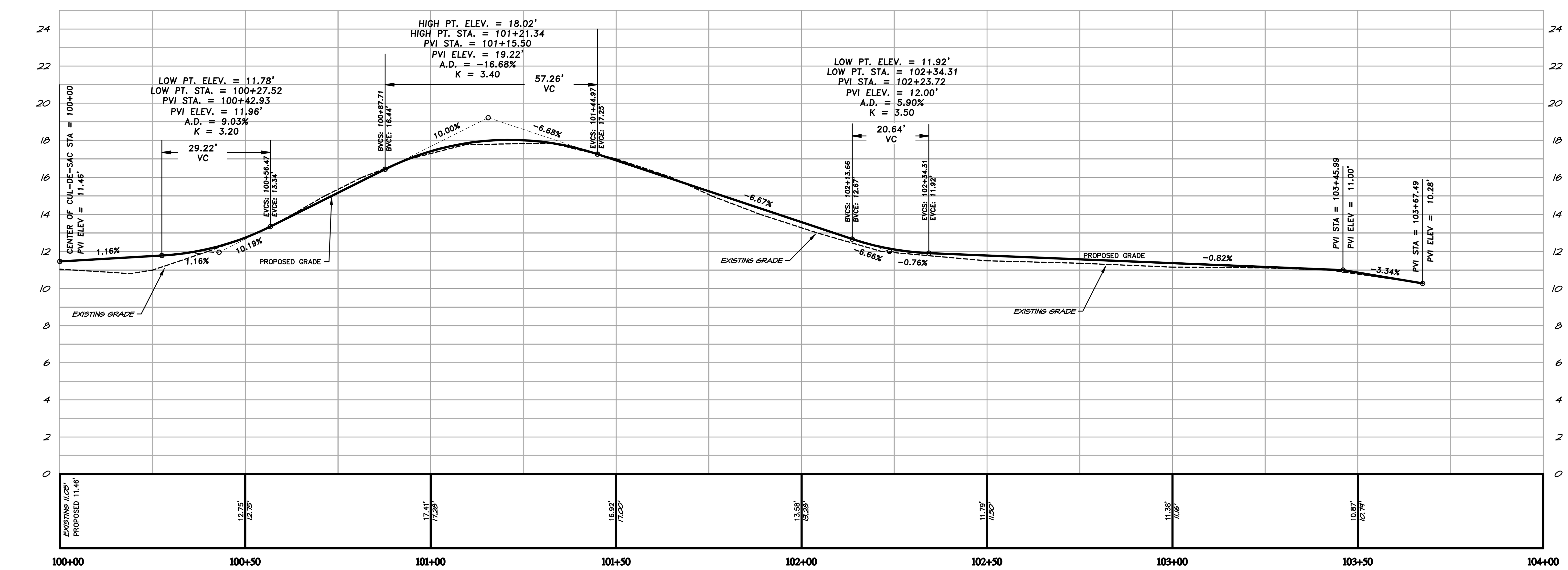

DRAWING FILE: BASE.DWG
PLOT SCALE: 1"=20'

NOTE:

THE DATA GIVEN ON THESE PLANS IS BELIEVED TO BE ACCURATE, BUT THE ACCURACY IS NOT GUARANTEED. THE CONTRACTOR IS RESPONSIBLE FOR VERIFYING ALL LEVELS, LOCATIONS, TYPES, AND DIMENSIONS OF THE EXISTING UTILITIES PRIOR TO CONSTRUCTION. IF A DISCREPANCY IS FOUND, WORK SHALL CEASE AND THE ENGINEER NOTIFIED. WORK MAY CONTINUE UPON ENGINEERS NOTICE TO PROCEED.

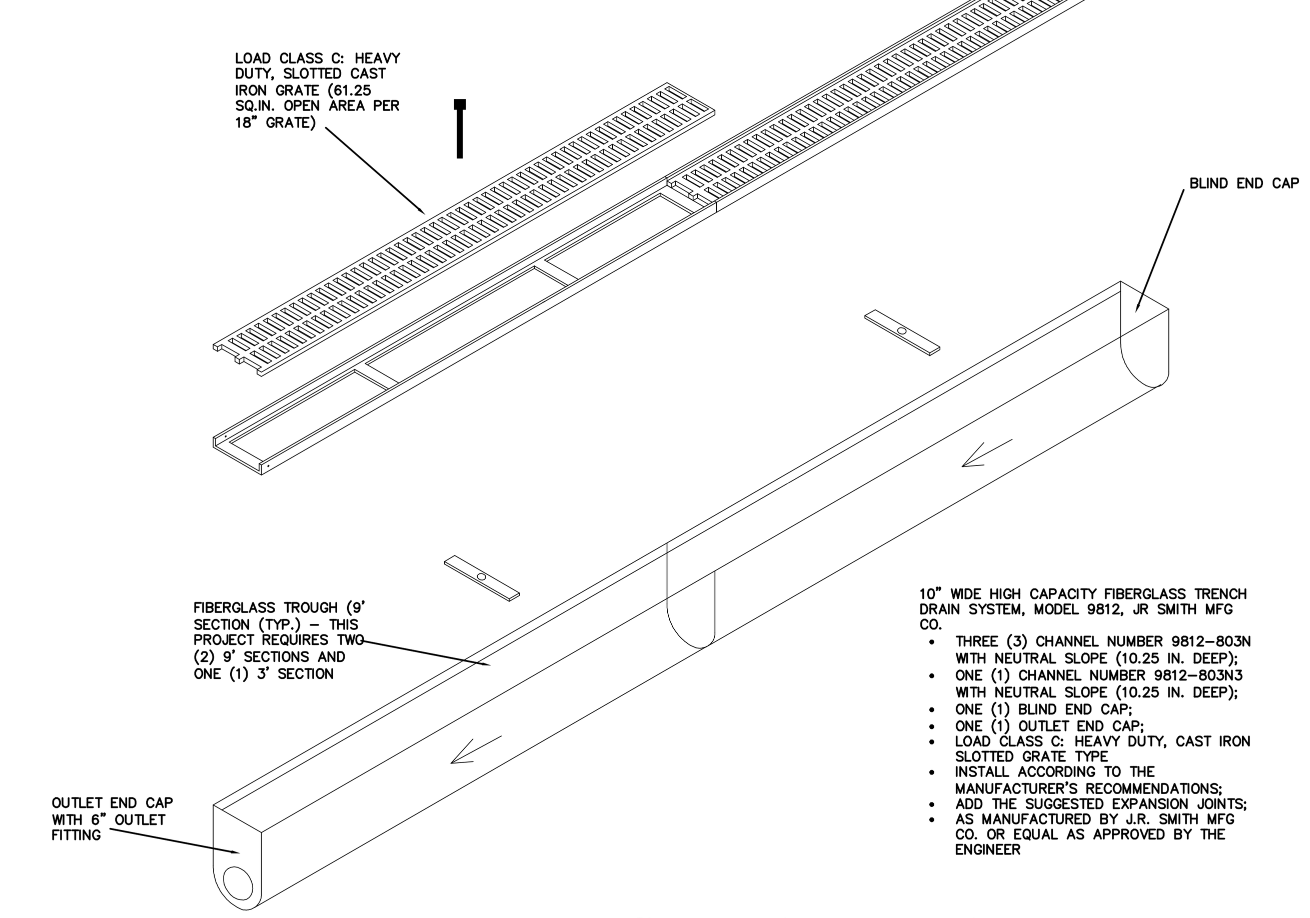

10" WIDE HIGH CAPACITY FIBERGLASS TRENCH DRAIN SYSTEM, MODEL 9812, JR SMITH MFG CO.
- THREE (3) CHANNEL NUMBER 9812-803N WITH NEUTRAL SLOPE (10.25 IN. DEEP);
- ONE (1) CHANNEL NUMBER 9812-803N3 WITH NEUTRAL SLOPE (10.25 IN. DEEP);
- ONE (1) BLIND END CAP;
- ONE (1) OUTLET END CAP;
- LOAD CLASS C: HEAVY DUTY, CAST IRON SLOTTED GRATE TYPE
- INSTALL ACCORDING TO THE MANUFACTURER'S RECOMMENDATIONS;
- ADD THE SUGGESTED EXPANSION JOINTS;
- AS MANUFACTURED BY J.R. SMITH MFG CO. OR EQUAL AS APPROVED BY THE ENGINEER

TRENCH DRAIN DETAIL

N.T.S.

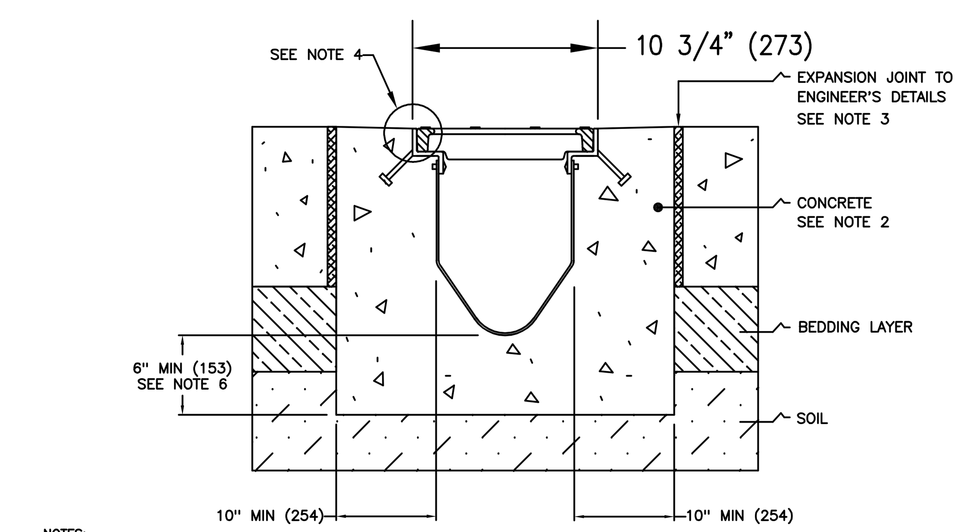

NOTES:
1. It is necessary to ensure the minimum dimensions shown are suitable for the existing ground conditions. Engineering advice may be required.
2. A minimum concrete strength of 3000 PSI is recommended. The concrete should be vibrated to eliminate air pockets.
3. Expansion and crack control joints are recommended to protect the channel and the concrete surround. Engineering advice may be required.
4. The finished level of the concrete surround must be approx. 1/8" (3) above the top of the channel edge.
5. Refer to SMITH/ACO's latest installation instructions for complete details.
6. Concrete base thickness should match slab thickness.

SMITH DRAINAGE SYSTEMS
SMITH
JAY R. SMITH MFG CO.
DIV. OF SMITH INDUSTRIES
MONTGOMERY, AL
CUSTOMER DRIVEN
WWW.JRSMITH.COM

INSTALLATION DRAWING

9812 SERIES TRENCH DRAIN-LOAD CLASS A-C
INSTALLED IN CONCRETE

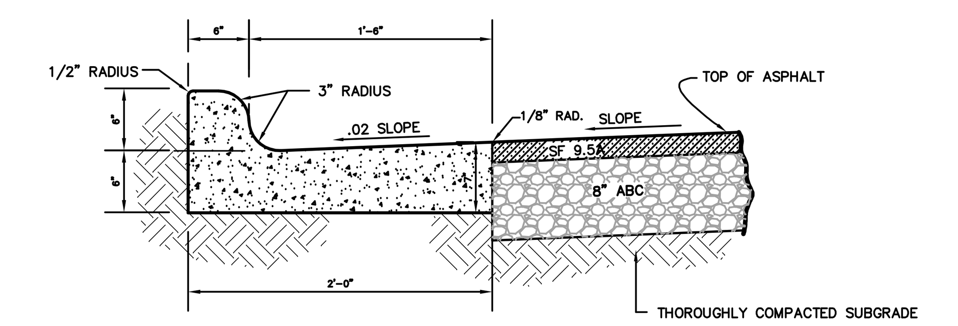

2'-0" CURB and GUTTER

REF. NCDOT STD. 846.01
N.T.S.

LEGEND

+ 33.05	EXISTING ELEVATION(±.03')		TELEVISION PEDESTAL
+ 33.0	EXISTING ELEVATION(±.05')		MAIL BOX
	CONCRETE MONUMENT		TRAFFIC SIGN
	IRON ROD/PIPE		LIGHT POLE
	WATER METER		R/W
	WATER VALVE		VEGETATION LIMITS
	TELEPHONE PEDESTAL		TREE
	EXISTING ASPHALT		EXISTING CONTOURS
	PROPOSED ASPHALT		APPROX. LOCATION OF POWER UTILITY LINE
	PROPOSED CONCRETE		APPROX. LOCATION OF CABLE UTILITY LINE
	PROPOSED ABC		APPROX. LOCATION OF PHONE UTILITY LINE
	PROPOSED RIPRAP		PROPOSED CONTOURS
4.00'	PROP. EL. SHOT		PROPOSED N-12 SOLID WALL PIPE
			PROPOSED ROLL-BACK CURB
			PROPOSED CURB AND GUTTER

Anlauf Engineering, PLLC
CIVIL ENGINEERING SERVICES
FIRM LICENSE NO.: P-0929
JANLAUF2645@CHARTER.NET - 4721 W. ECKNER ST., KITTY HAWK, NC - (252) 489-7143

NORTH CAROLINA PROFESSIONAL SEAL 26980 ENGINEER JOSEPH J. ANLAUF

CERTIFICATION

COPYRIGHT © 2015 ANLAUF ENGINEERING, PLLC
THIS DOCUMENT IS THE PROPERTY OF ANLAUF ENGINEERING, PLLC. ALL RIGHTS ARE RESERVED. ANY REPRODUCTION OF THIS OR POSSESSION WITHOUT PRIOR PERMISSION OF ANLAUF ENGINEERING, PLLC, WILL BE A VIOLATION OF COPYRIGHT LAW.

NO.	DATE	REVISIONS

ROAD CONSTRUCTION PLAN

FOX GRAPE LANE

TOWN OF SOUTHERN SHORES
ATLANTIC TOWNSHIP DARE COUNTY NORTH CAROLINA

COMMISSION NO.	P11009.28
DESIGNED BY	JJA
DRAWN BY	JJA
CHECKED BY	JJA
ISSUE DATE	9/3/15

SHEET NO.
S3
OF 7 SHEETS